PDF Creator - PDF4Free v2.0

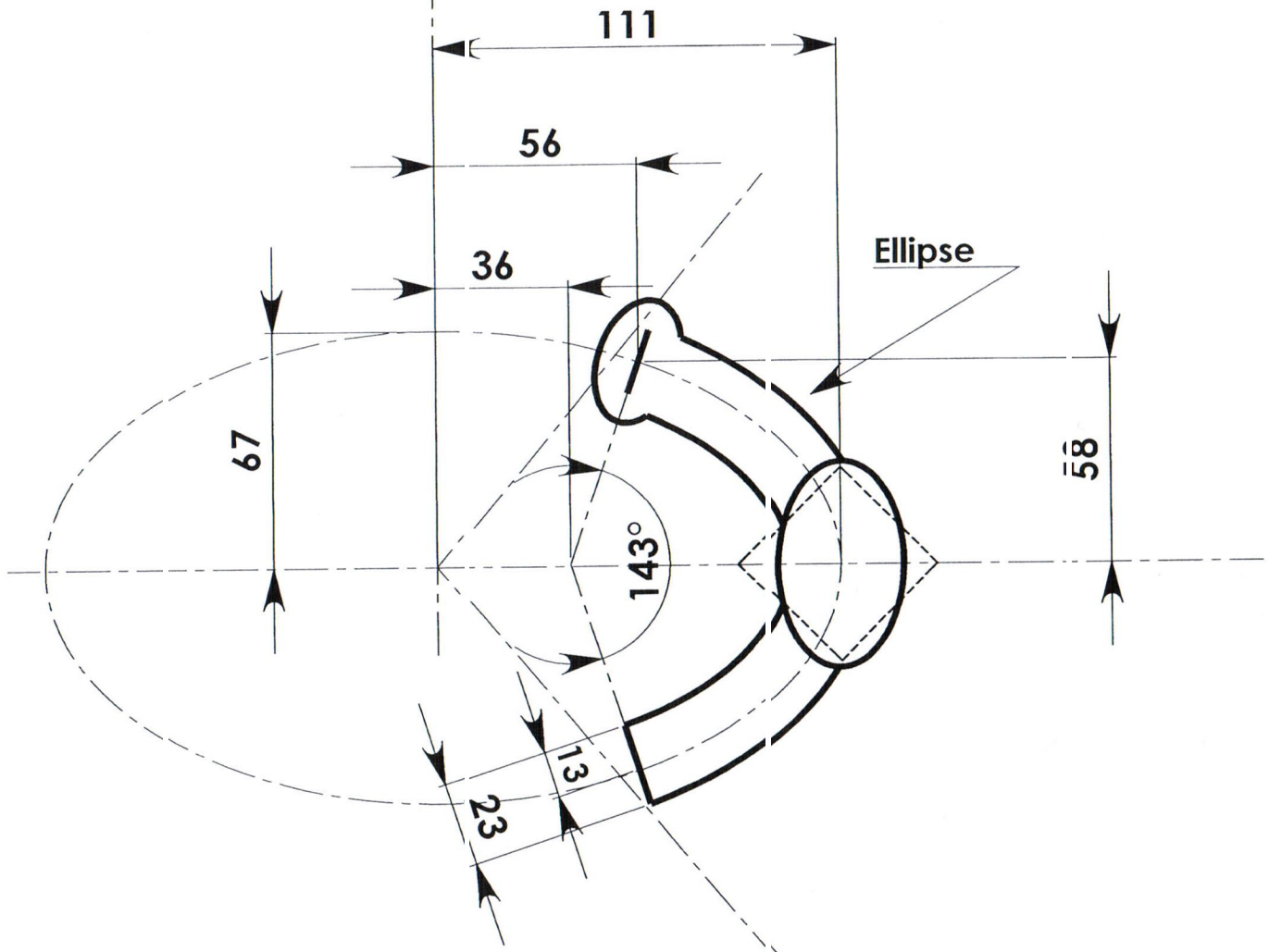

REVISIONS			
ZONE	DESCRIPTION	DATE	APPROVED

PROPRIETARY AND CONFIDENTIAL

THE INFORMATION CONTAINED IN THIS DRAWING IS THE SOLE PROPERTY OF <INSERT COMPANY NAME HERE>. ANY REPRODUCTION IN PART OR AS A WHOLE WITHOUT THE WRITTEN PERMISSION OF <INSERT COMPANY NAME HERE> IS PROHIBITED.

NEXT ASSY	USED ON
APPLICATION	

DIMENSIONS ARE IN INCHES
TOLERANCES:
FRACTIONAL ±
ANGULAR: MACH ± BEND ±
TWO PLACE DECIMAL ±
THREE PLACE DECIMAL ±

MATERIAL --

FINISH --

DO NOT SCALE DRAWING

	NAME	DATE
DRAWN	KHARTZ	28/07/2009
CHECKED		
ENG APPR.		
MFG APPR.		
Q.A.		

COMMENTS:

KILCHURN WINES

15546 Angle Neck label

SIZE **A** | DWG. NO. | REV.

SCALE:1:2 | WEIGHT: | SHEET 1 OF 1

http://www.pdf4free.com