Toyota Tacoma_13_04

2013

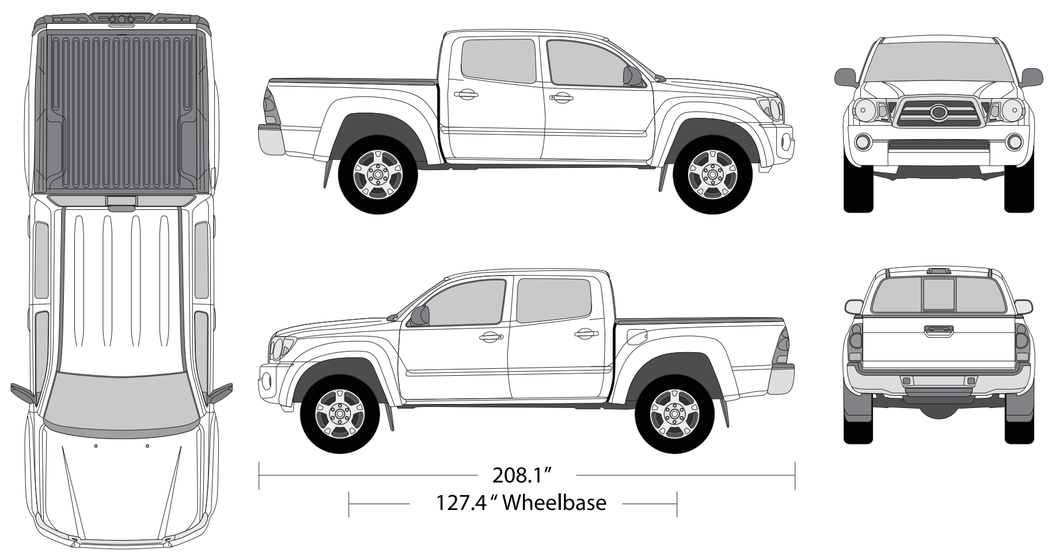

©2018 Art Station Vehicle Templates